DT-2V(W)4A2C-X

PINOUT DIAGRAM

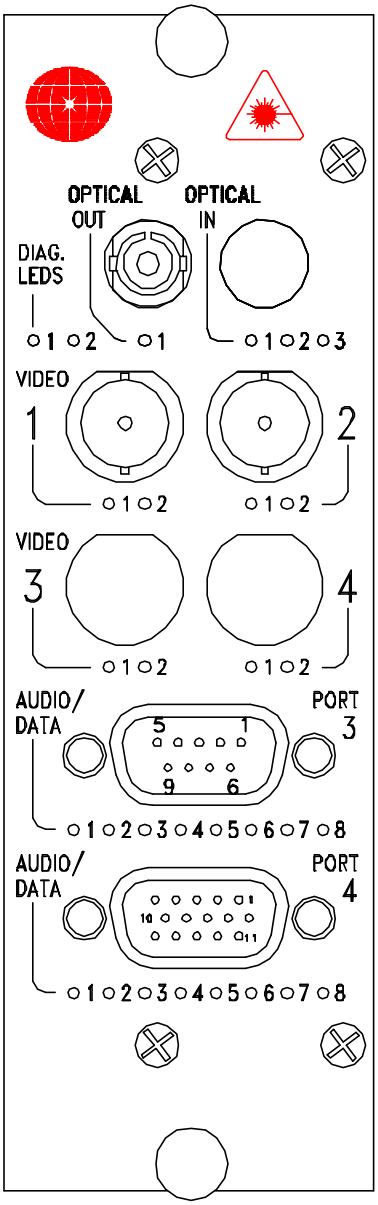

OPTICAL PORT

STATUS INDICATORS

1. POWER (GREEN)
2. NA

STATUS INDICATORS

1. TX CARRIER (GREEN)/ERROR (RED)

VIDEO INPUT (CH.1) STATUS INDICATORS

1. SYNC PRESENT (GREEN)
2. VIDEO PRESENT (GREEN)/OVERLOAD (RED)

VIDEO INPUT (CH.2) STATUS INDICATORS

1. SYNC PRESENT (GREEN)
2. VIDEO PRESENT (GREEN)/OVERLOAD (RED)

AUDIO INPUT (PORT 3)

(DB-9 FEMALE)

1. (CH.1) INPUT-
2. (CH.1) INPUT+
3. (CH.2) INPUT-
4. (CH.2) INPUT+
5. GND
6. (CH.3) INPUT-
7. (CH.3) INPUT+
8. (CH.4) INPUT-
9. (CH.4) INPUT+

STATUS INDICATORS (PORT 3)

1. (CH.1) AUDIO INPUT PRESENT
2. (CH.1) AUDIO INPUT OVERLOAD
3. (CH.2) AUDIO INPUT PRESENT
4. (CH.2) AUDIO INPUT OVERLOAD
5. (CH.3) AUDIO INPUT PRESENT
6. (CH.3) AUDIO INPUT OVERLOAD
7. (CH.4) AUDIO INPUT PRESENT
8. (CH.4) AUDIO INPUT OVERLOAD

DATA INPUT (PORT 4)

(DB-15HD FEMALE)

1. (CH.1) INPUT
2. (CH.2) INPUT
3. NA
4. NA
5. GND
6. NA
7. NA
8. NA
9. NA
10. NA
11. NA
12. NA
13. NA
14. NA
15. NA

STATUS INDICATORS (PORT 4)

1. (CH.1) INPUT PRESENT
2. NA
3. (CH.2) INPUT PRESENT
4. NA
5. NA
6. NA
7. NA
8. NA

MERIDIAN TECHNOLOGIES INC
FILE NAME: 2V4A2C.DWG
11/21/2005 V.1

DR-2V(W)4A2C-X

PINOUT DIAGRAM

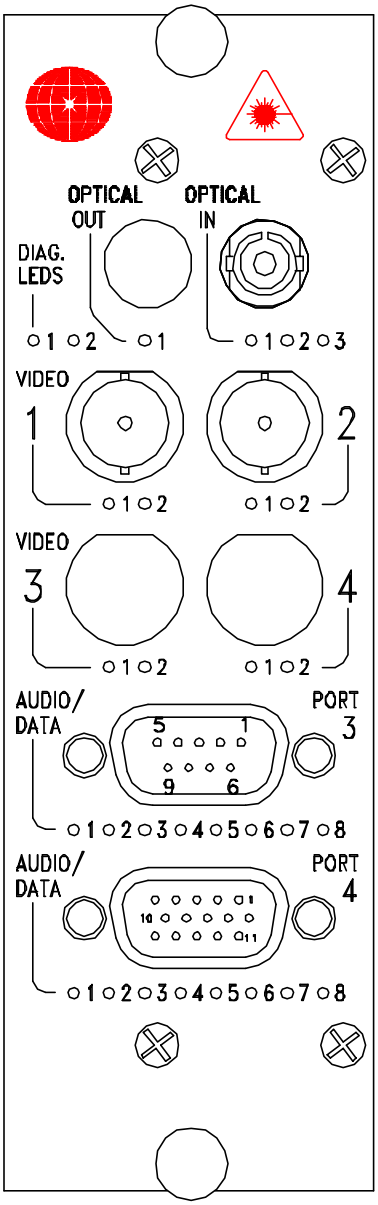

STATUS INDICATORS
1. POWER (GREEN)
2. NA

STATUS INDICATORS
1. NA

VIDEO OUTPUT (CH.1) STATUS INDICATORS
1. SYNC PRESENT (GREEN)
2. VIDEO PRESENT (GREEN)/OVERLOAD (RED)

AUDIO OUTPUT (PORT 3) (DB-9 FEMALE)
1. (CH.1) OUTPUT-
2. (CH.1) OUTPUT+
3. (CH.2) OUTPUT-
4. (CH.2) OUTPUT+
5. GND
6. (CH.3) OUTPUT-
7. (CH.3) OUTPUT+
8. (CH.4) OUTPUT-
9. (CH.4) OUTPUT+

DATA OUTPUT (PORT 4) (DB-15HD FEMALE)
1. (CH.1) OUTPUT
2. (CH.1) OUTPUT
3. (CH.2) OUTPUT
4. (CH.2) OUTPUT
5. GND
6. NA
7. NA
8. NA
9. NA
10. NA
11. NA
12. NA
13. NA
14. NA
15. NA

OPTICAL PORT
STATUS INDICATORS
1. RX OPTICAL SIGNAL (GREEN)/ABSENT (RED)
2. NA
3. RX CARRIER (GREEN)/ERROR (RED)

VIDEO OUTPUT (CH.2) STATUS INDICATORS
1. SYNC PRESENT (GREEN)
2. VIDEO PRESENT (GREEN)/OVERLOAD (RED)

STATUS INDICATORS (PORT 3)
1. (CH.1) AUDIO OUTPUT PRESENT
2. (CH.1) AUDIO OUTPUT OVERLOAD
3. (CH.2) AUDIO OUTPUT PRESENT
4. (CH.2) AUDIO OUTPUT OVERLOAD
5. (CH.3) AUDIO OUTPUT PRESENT
6. (CH.3) AUDIO OUTPUT OVERLOAD
7. (CH.4) AUDIO OUTPUT PRESENT
8. (CH.4) AUDIO OUTPUT OVERLOAD

STATUS INDICATORS (PORT 4)
1. NA
2. (CH.1) OUTPUT PRESENT
3. NA
4. (CH.2) OUTPUT PRESENT
5. NA
6. NA
7. NA
8. NA

MERIDIAN TECHNOLOGIES INC
FILE NAME: 2V4A2C.DWG
11/21/2005 V.1