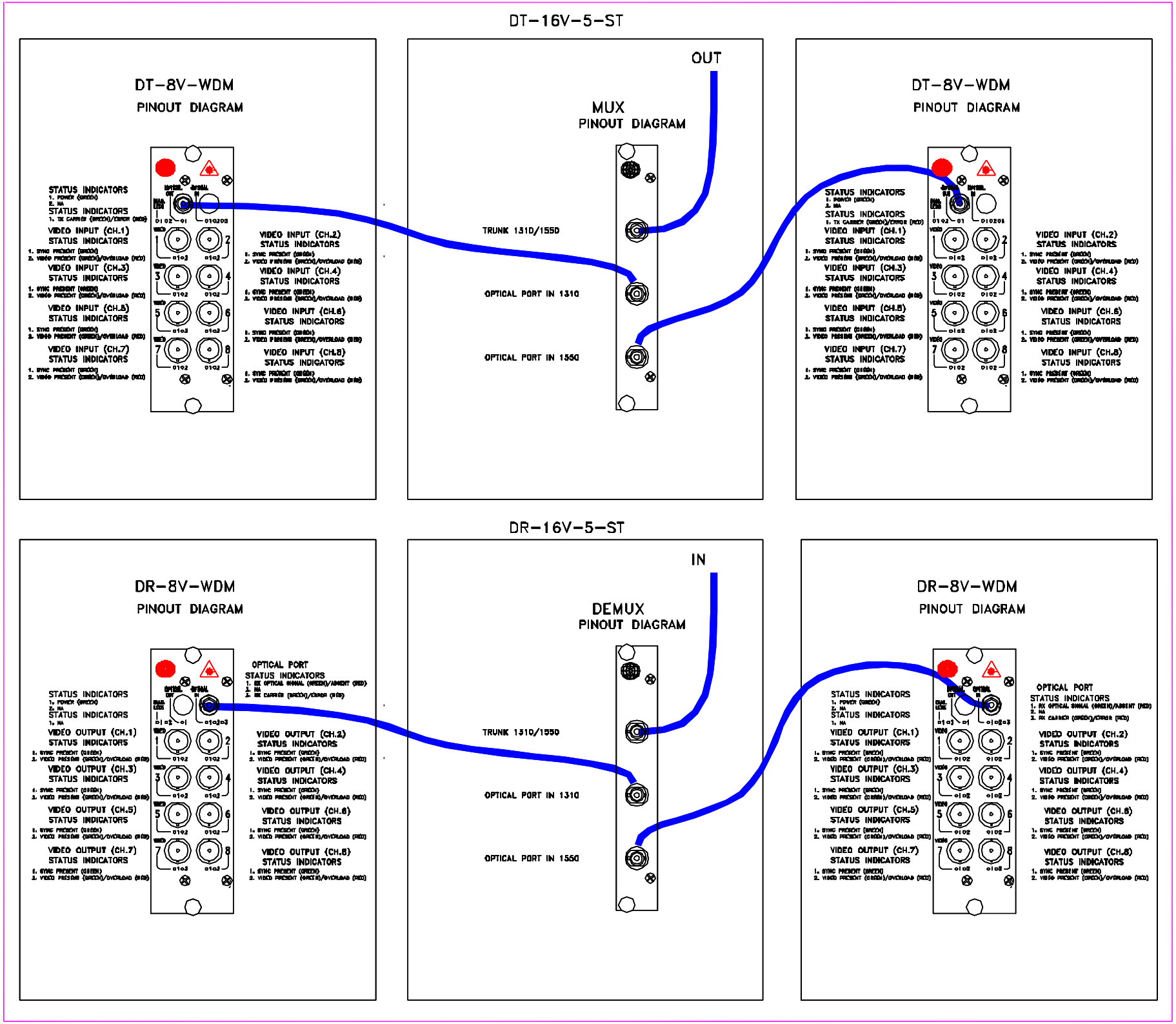
DT-16V-5-ST
DT-8V-WDM
PINOUT DIAGRAM
STATUS INDICATORS
1. POWER (GREEN)
2. NA
STATUS INDICATORS
1. TX CARRIER (GREEN)/ERROR (RED)
VIDEO INPUT (CH.1)
STATUS INDICATORS
1. SYNC PRESENT (GREEN)
2. VIDEO PRESENT (GREEN)/OVERLOAD (RED)
VIDEO INPUT (CH.3)
STATUS INDICATORS
1. SYNC PRESENT (GREEN)
2. VIDEO PRESENT (GREEN)/OVERLOAD (RED)
VIDEO INPUT (CH.5)
STATUS INDICATORS
1. SYNC PRESENT (GREEN)
2. VIDEO PRESENT (GREEN)/OVERLOAD (RED)
VIDEO INPUT (CH.7)
STATUS INDICATORS
1. SYNC PRESENT (GREEN)
2. VIDEO PRESENT (GREEN)/OVERLOAD (RED)
VIDEO INPUT (CH.2)
STATUS INDICATORS
1. SYNC PRESENT (GREEN)
2. VIDEO PRESENT (GREEN)/OVERLOAD (RED)
VIDEO INPUT (CH.4)
STATUS INDICATORS
1. SYNC PRESENT (GREEN)
2. VIDEO PRESENT (GREEN)/OVERLOAD (RED)
VIDEO INPUT (CH.6)
STATUS INDICATORS
1. SYNC PRESENT (GREEN)
2. VIDEO PRESENT (GREEN)/OVERLOAD (RED)
VIDEO INPUT (CH.8)
STATUS INDICATORS
1. SYNC PRESENT (GREEN)
2. VIDEO PRESENT (GREEN)/OVERLOAD (RED)
OUT
MUX
PINOUT DIAGRAM
TRUNK 1310/1550
OPTICAL PORT IN 1310
OPTICAL PORT IN 1550
DT-8V-WDM
PINOUT DIAGRAM
DR-16V-5-ST
DR-8V-WDM
PINOUT DIAGRAM
STATUS INDICATORS
1. POWER (GREEN)
2. NA
STATUS INDICATORS
1. NA
VIDEO OUTPUT (CH.1)
STATUS INDICATORS
1. SYNC PRESENT (GREEN)
2. VIDEO PRESENT (GREEN)/OVERLOAD (RED)
VIDEO OUTPUT (CH.3)
STATUS INDICATORS
1. SYNC PRESENT (GREEN)
2. VIDEO PRESENT (GREEN)/OVERLOAD (RED)
VIDEO OUTPUT (CH.5)
STATUS INDICATORS
1. SYNC PRESENT (GREEN)
2. VIDEO PRESENT (GREEN)/OVERLOAD (RED)
VIDEO OUTPUT (CH.7)
STATUS INDICATORS
1. SYNC PRESENT (GREEN)
2. VIDEO PRESENT (GREEN)/OVERLOAD (RED)
OPTICAL PORT
STATUS INDICATORS
1. RX OPTICAL SIGNAL (GREEN)/ABSENT (RED)
2. NA
3. RX CARRIER (GREEN)/ERROR (RED)
VIDEO OUTPUT (CH.2)
STATUS INDICATORS
1. SYNC PRESENT (GREEN)
2. VIDEO PRESENT (GREEN)/OVERLOAD (RED)
VIDEO OUTPUT (CH.4)
STATUS INDICATORS
1. SYNC PRESENT (GREEN)
2. VIDEO PRESENT (GREEN)/OVERLOAD (RED)
VIDEO OUTPUT (CH.6)
STATUS INDICATORS
1. SYNC PRESENT (GREEN)
2. VIDEO PRESENT (GREEN)/OVERLOAD (RED)
VIDEO OUTPUT (CH.8)
STATUS INDICATORS
1. SYNC PRESENT (GREEN)
2. VIDEO PRESENT (GREEN)/OVERLOAD (RED)
IN
DEMUX
PINOUT DIAGRAM
TRUNK 1310/1550
OPTICAL PORT IN 1310
OPTICAL PORT IN 1550
DR-8V-WDM
PINOUT DIAGRAM